G-8086H-LM56E0-T
Vintage Collection
Vintage M-Series Valve Horizontal Trim with Two Handles

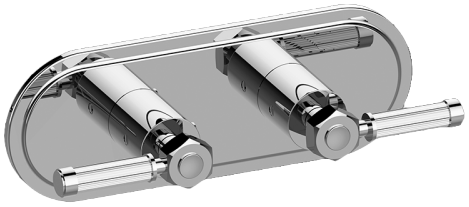

Product Features

- Two metal handles
- Decorative trim plate
- Use with M-Series rough valves
- LM56E0 handles should not be used with 2-way or 3-way diverter valves

Code compliance

- ADA

Available Finishes

- 24K Polished Gold
- 24K Brushed Gold
- 24K Brushed Gold/Architectural Black Accents
- Architectural Black™
- Brushed Nickel
- Gunmetal PVD®
- Gunmetal Distressed
- Matte Black
- Olive Bronze
- Polished Chrome
- Polished Chrome/Architectural Black Accents
- Polished Nickel
- Polished Nickel/Architectural Black Accents
- Unfinished Brass
- Unfinished Brushed Brass
- Vintage Brushed Brass
- Architectural White
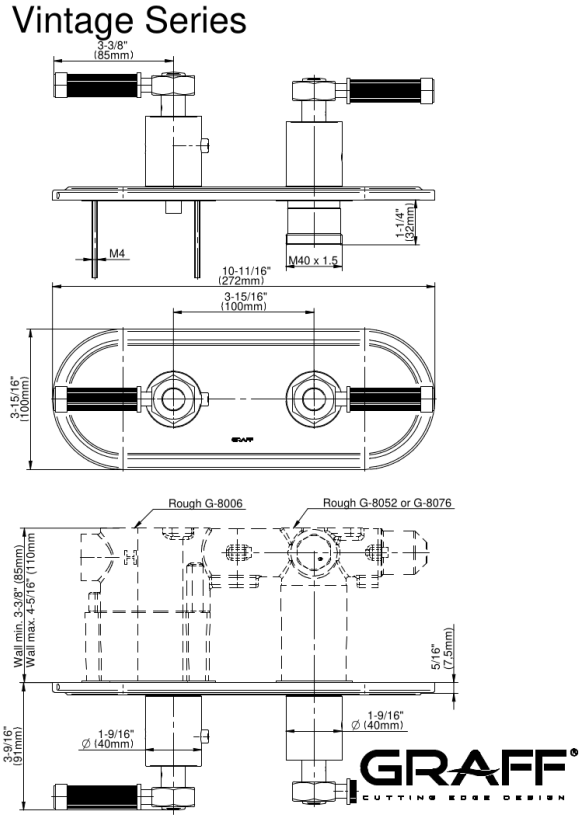
* Special order finish - call for availability