G-2110-LM21B
Bali Collection
Bali Widespread Lavatory Faucet

Product Features

- Aerated flow rate ≤ 1.2 max gpm
- 1 3/8” (x3) hole cutouts
- Includes Pop-up Drain Assembly w/Lift Rod & Overflow
- Optional matching decorative trap G-9973

Code compliance

- ADA
- CALGreen

Available Finishes

- 24K Polished Gold
- 24K Brushed Gold
- Olive Bronze
- Polished Chrome
- Polished Nickel
- Steelnox® (Satin Nickel)
- Vintage Brushed Brass
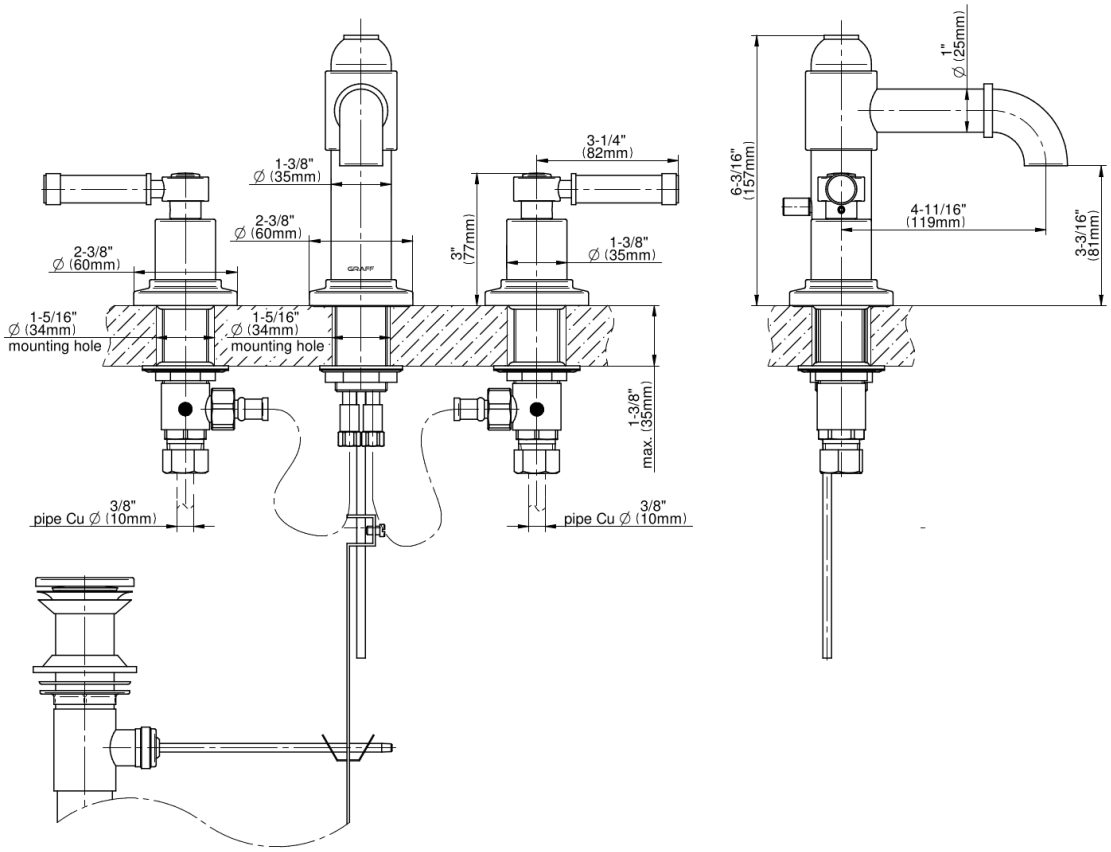
* Special order finish - call for availability