G-8086-LM34E0-T

Adley M-Series Valve Trim with Two Handles

Product Features

- Two metal handles, decorative trim plate
- Use with M-Series rough valves
- LM15E0, LM34E0 and LC1E0 handles should not be used with 3-way diverter valve

Available Finishes

- 24K Polished Gold
- 24K Brushed Gold
- Olive Bronze
- Olive Bronze
- Polished Chrome
- Polished Chrome
- Polished Nickel
- Polished Nickel
- Steelnox® (Satin Nickel)
- Steelnox® (Satin Nickel)
- Vintage Brushed Brass
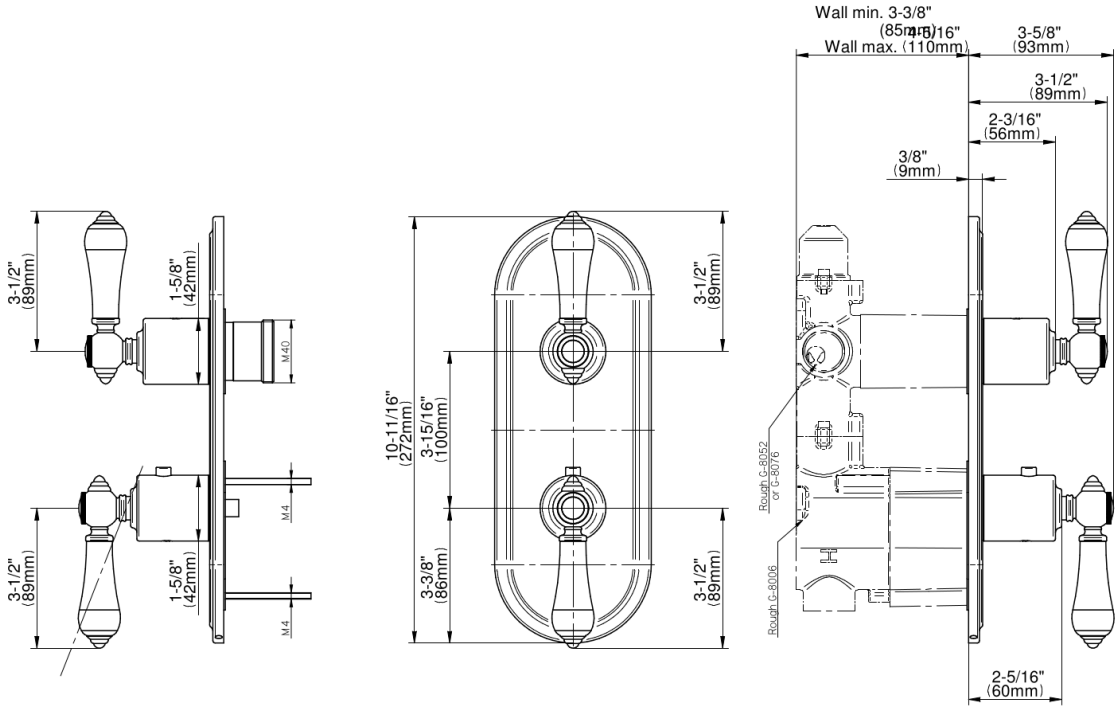
* Special order finish - call for availability