G-8053

3-way Diverter Valve - Rough - M-Series

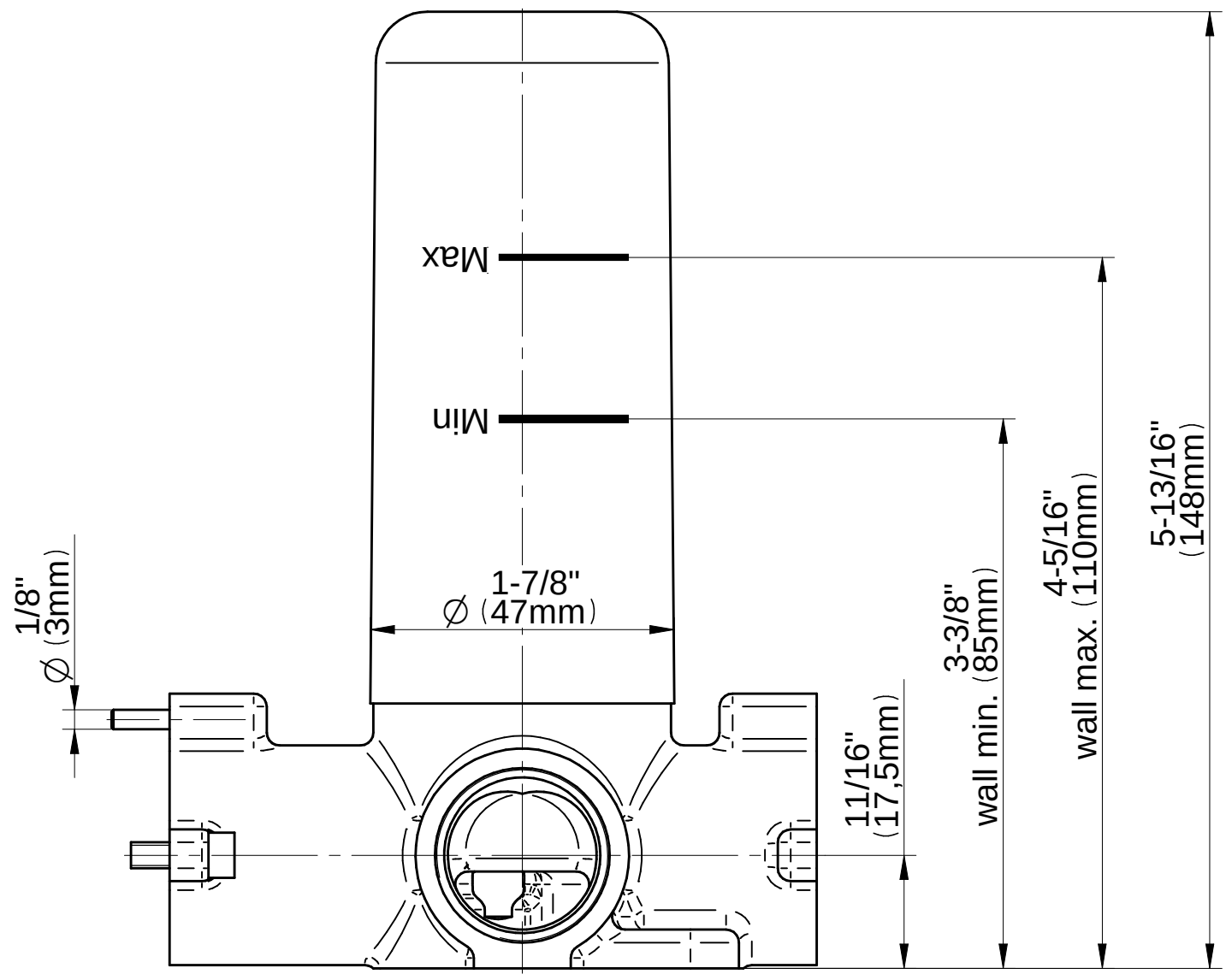

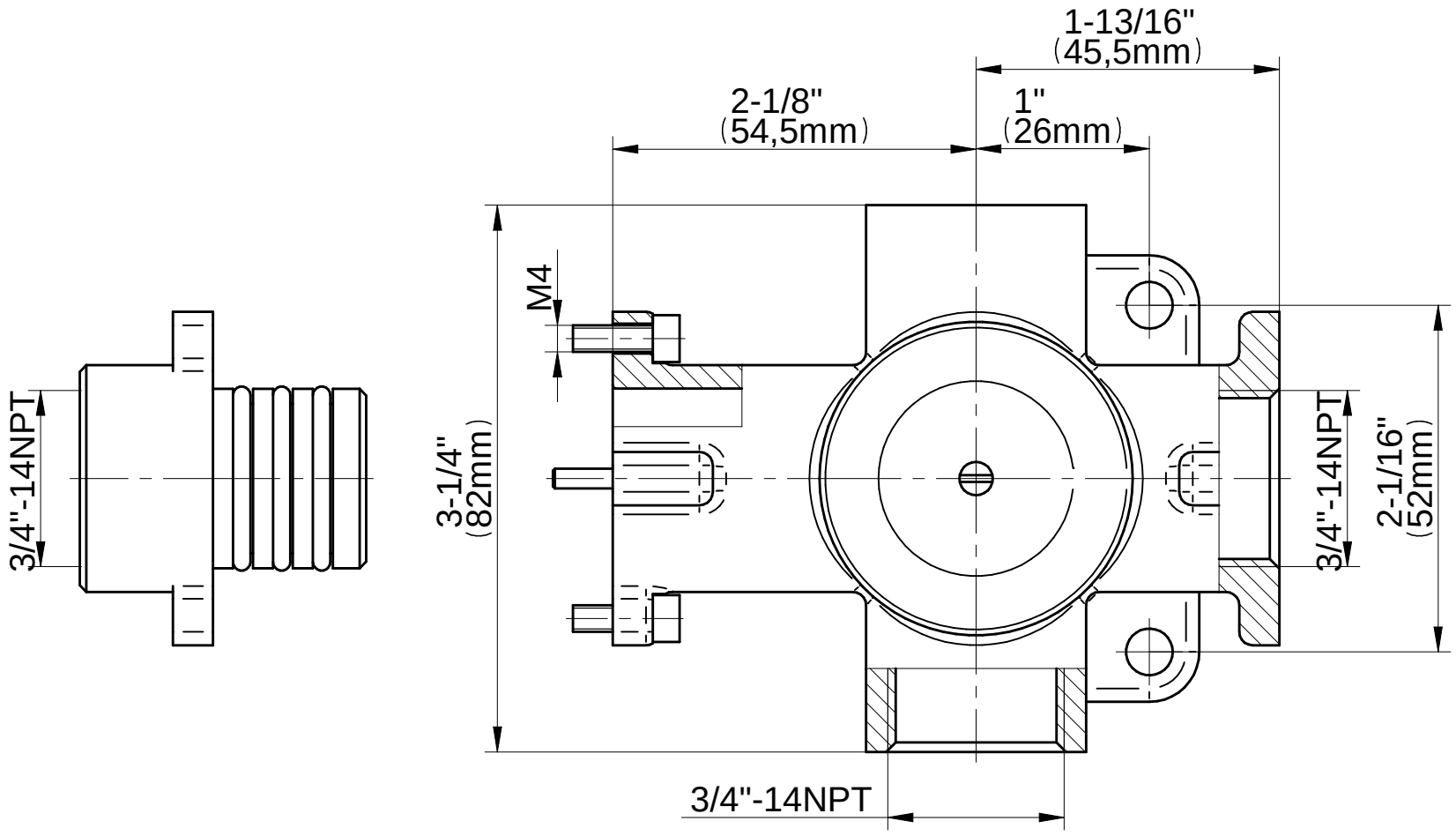

GRAFF®

CUTTING EDGE DESIGN