TEP15-OF

Tephi

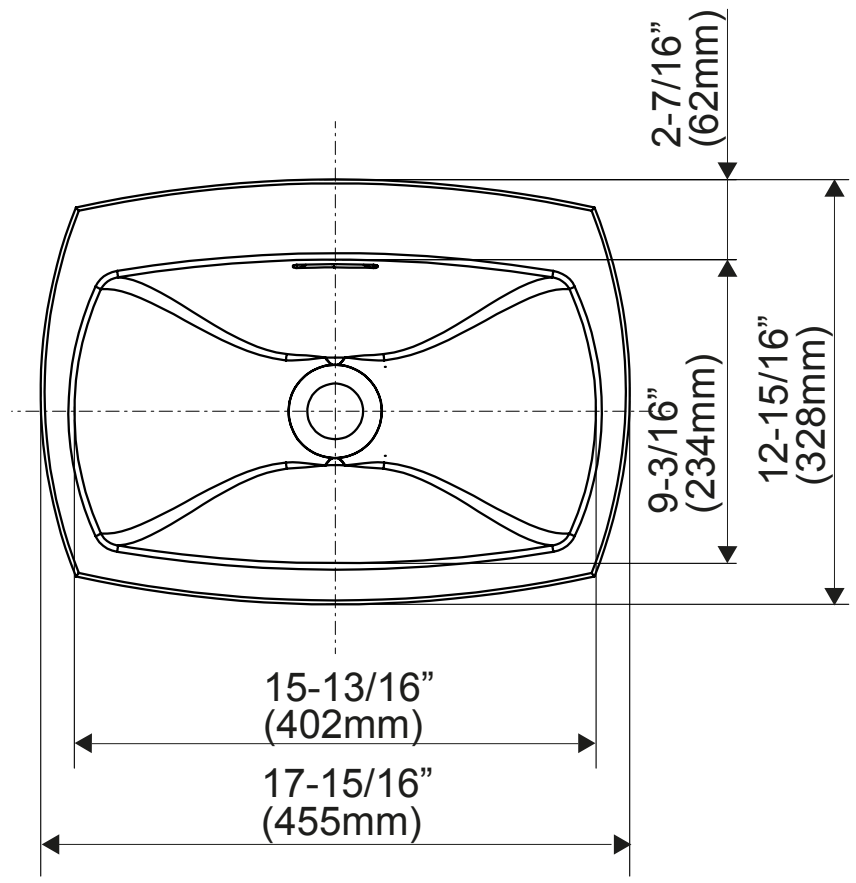

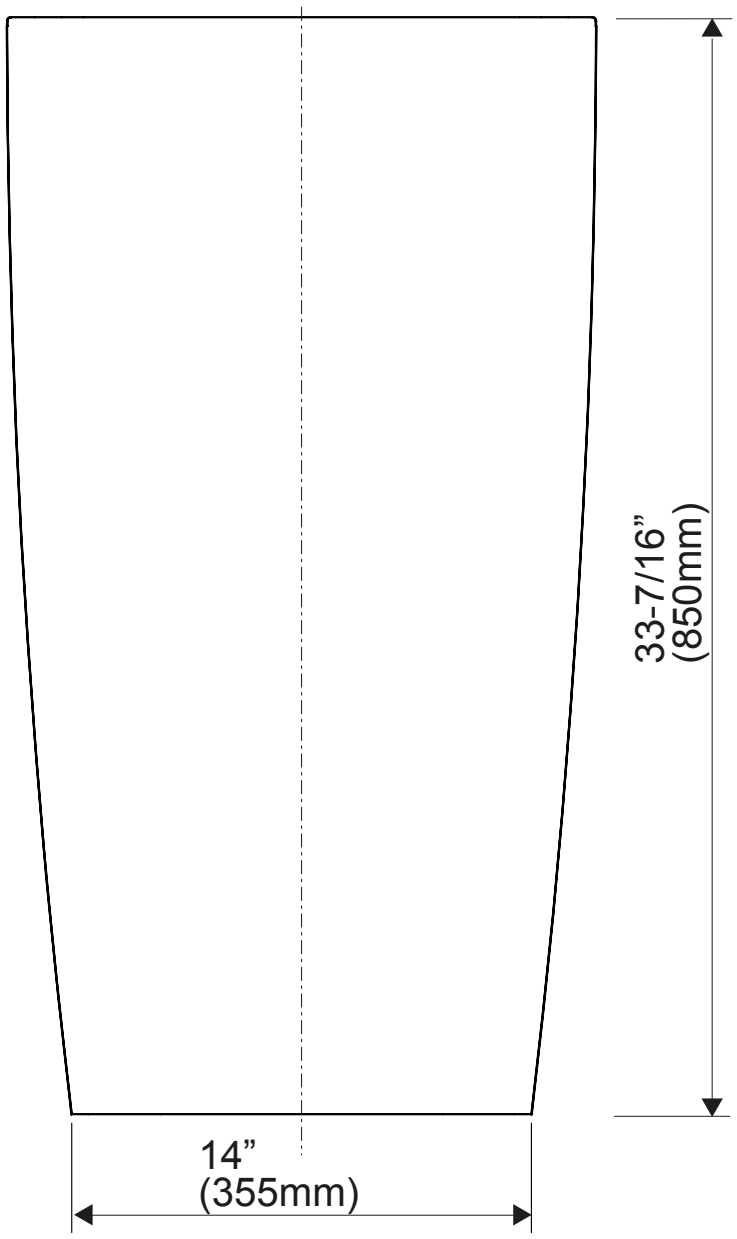

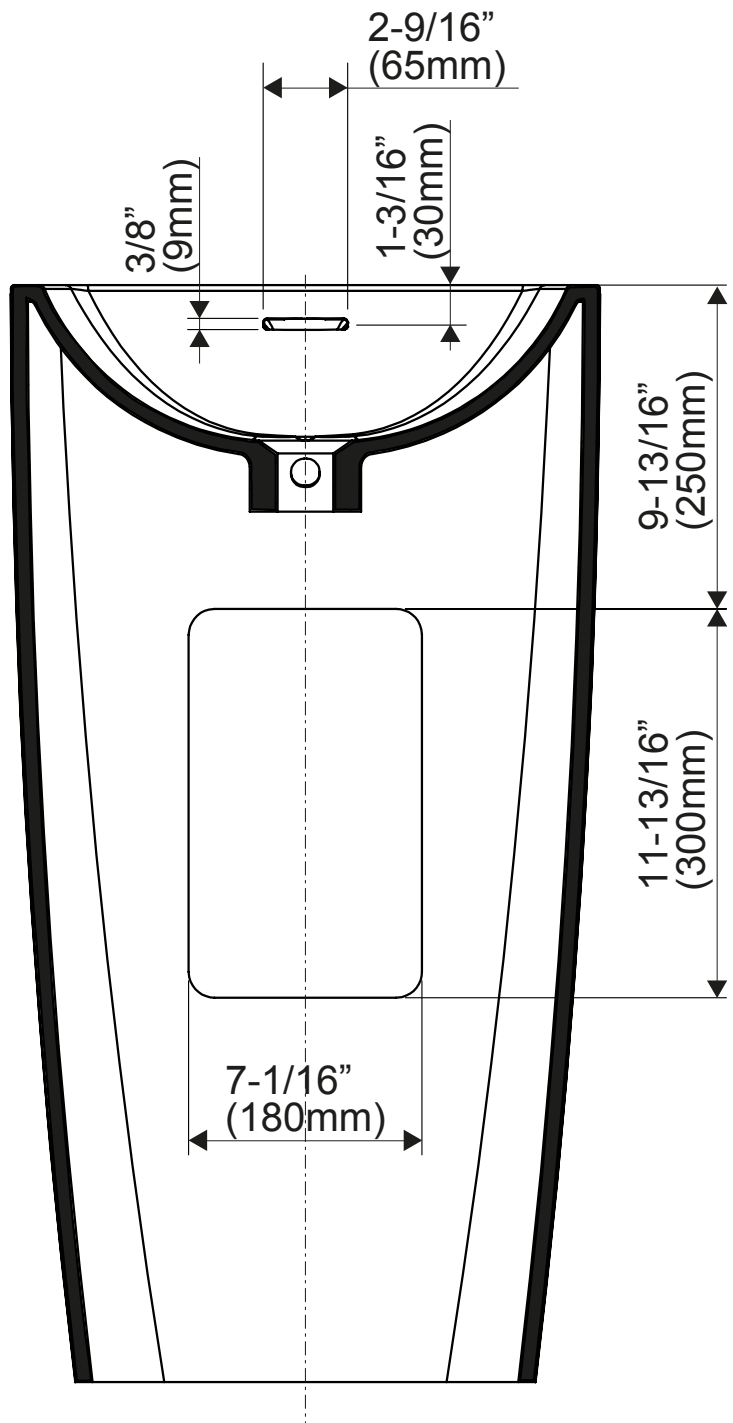

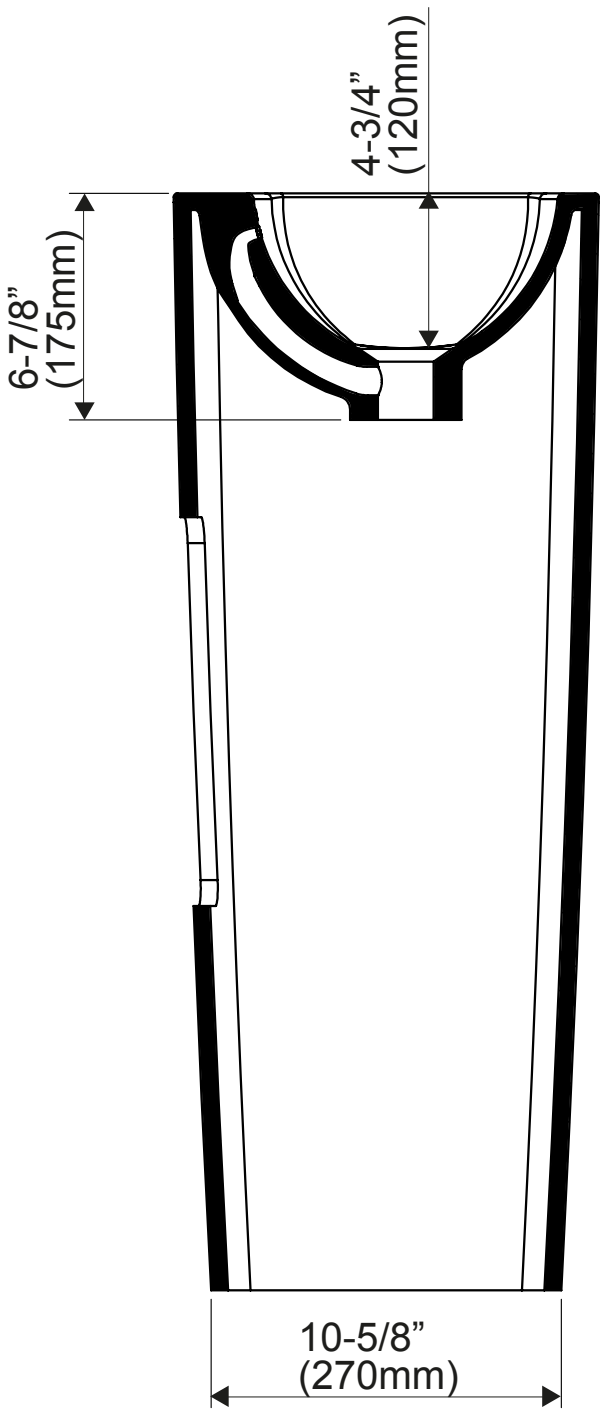

GRAFF®

CUTTING EDGE DESIGN